STANDARD DETAILS CITY OF SHERWOOD ARKANSAS	TITLE FENCE POST FLANGE DETAIL AT EXPANSION JOINT		STD-59
		Issue Date January, 2007	Revision Date

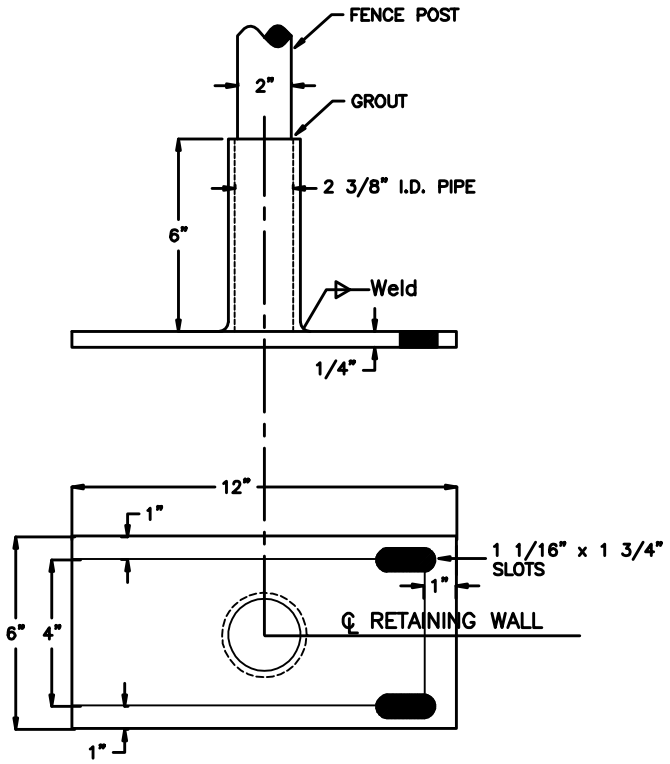

BASE FLANGE

BASE FLANGE SHALL BE GALVANIZED

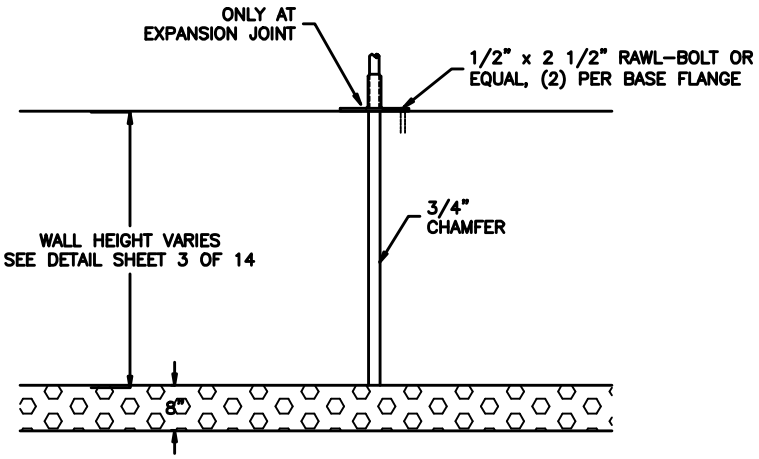

BASE FLANGE LOCATION